Tolerances

Tolerances

- Variation is unavoidable
- No two manufactured parts are identical – some degree of variation will exist
- Tolerances are used in production drawings to control the manufacturing process and control the variation between copies of the same part
- In particular, tolerances are applied to mating parts in an assembly
  - One advantage in using tolerances is that **interchangeable parts** can be used

Tolerances

- Large tolerance may affect functionality of part
  - Specify tolerances to ensure proper function
- Small tolerance will affect the cost of the part
  - Cost generally increases with smaller tolerances
  - Will require precise manufacturing
  - Will require quality control with inspection and rejection of parts
- Do not specify a tolerance that is smaller than necessary!

Tolerances

ANSI/ASME Standard Y14.5

Each dimension shall have a tolerance, except those dimensions specifically identified as reference, maximum, minimum, or stock. The tolerance may be applied directly to the dimension or indicated by a general note located in the title block of the drawing.

Tolerances

A ***tolerance*** is an acceptable amount of dimensional variation that will still allow an object to function correctly.

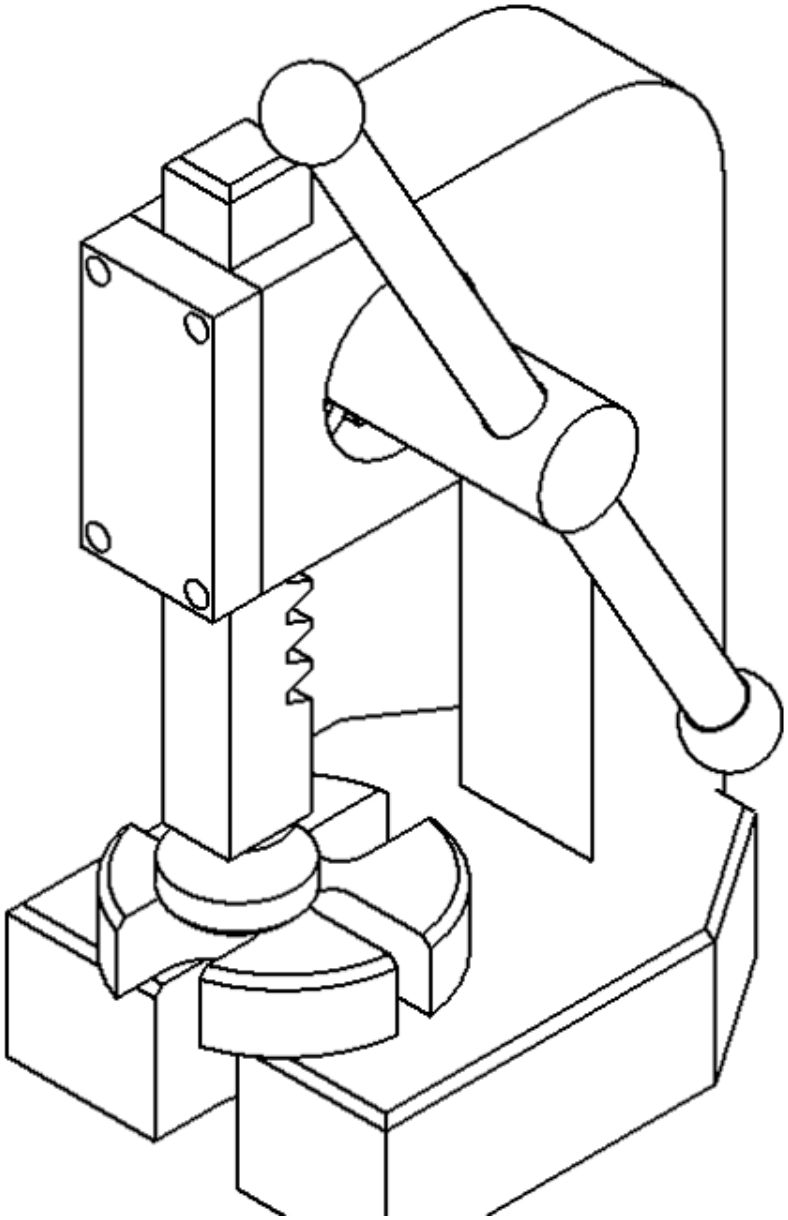

Tolerances

Three basic tolerances that occur most often on working drawings are:

- ***limit dimensions***
- ***bilateral tolerance***
- ***unilateral tolerance***

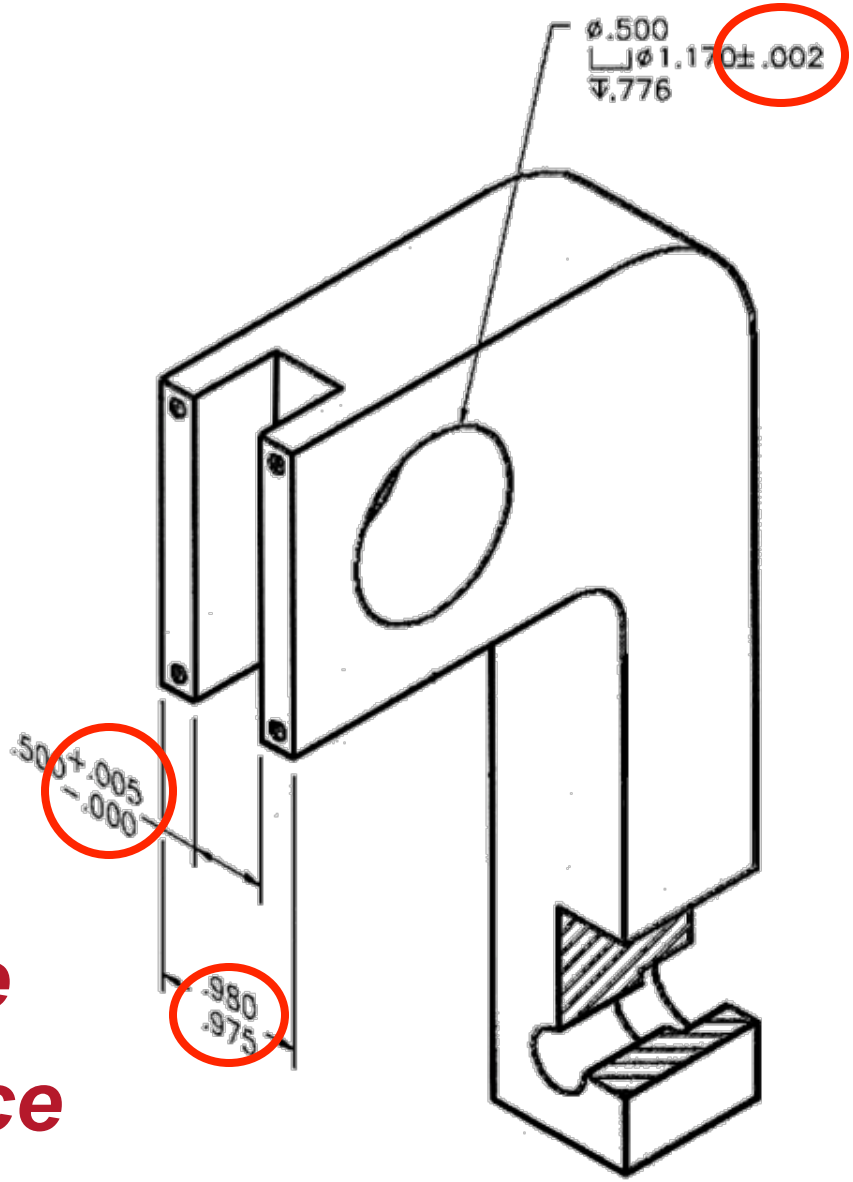

Limit Dimensions

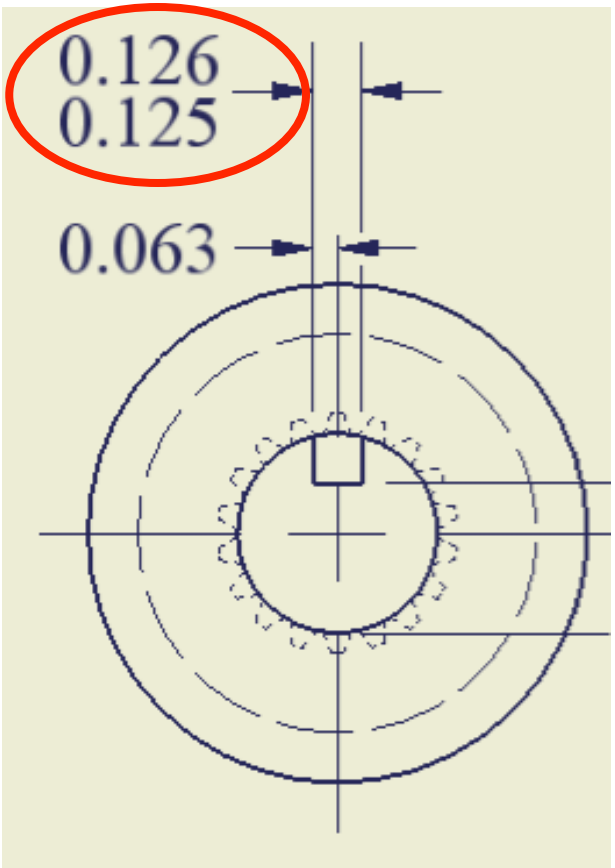

- Provide an upper limit and lower limit for the dimension.
- Any size between or equal to the upper limit and/or lower limit is allowed
  - The upper limit dimension is 0.126
  - The lower limit dimension is 0.125

Bilateral Tolerance

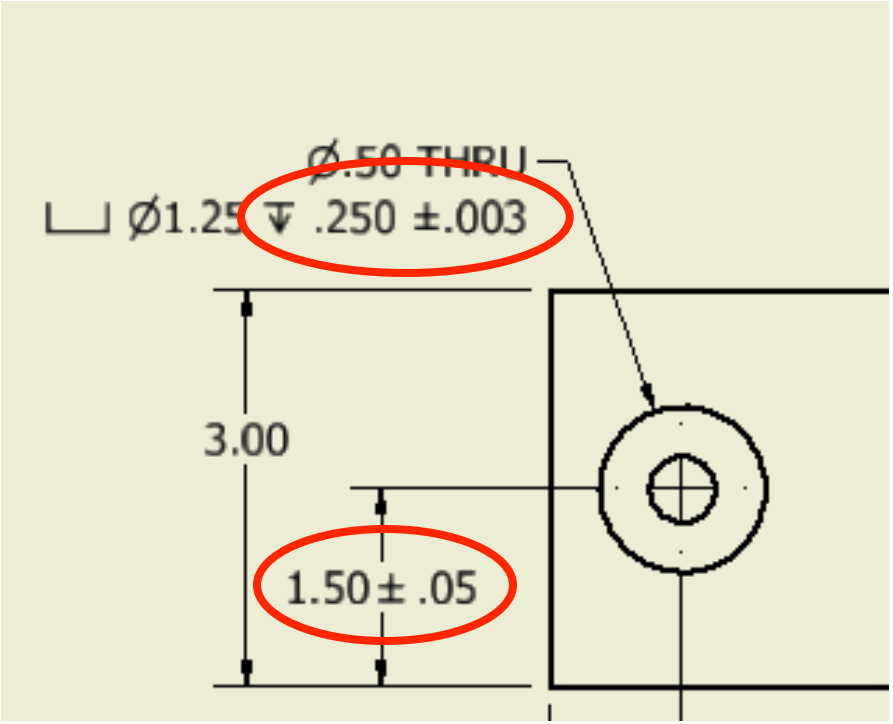

- Provides an equal allowable variation, larger and smaller
- Uses a plus/minus (±) symbol to specify the allowable variation
  - Counter bore depth can be .003 larger or smaller than .25
  - Hole location can be .05 larger or smaller than 1.50

Unilateral Tolerance

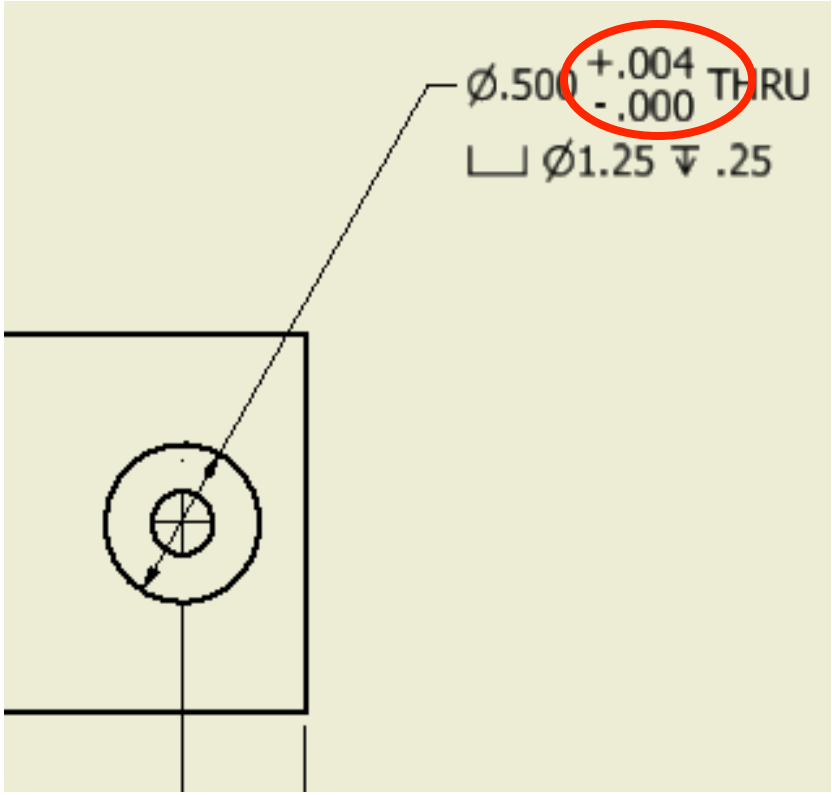

- Provides an allowable variation in only one direction (either larger or smaller)
- Uses separate plus (+) and minus (–) signs
  - The hole diameter may vary .004 ***larger*** but may not be smaller than .500

Tolerances

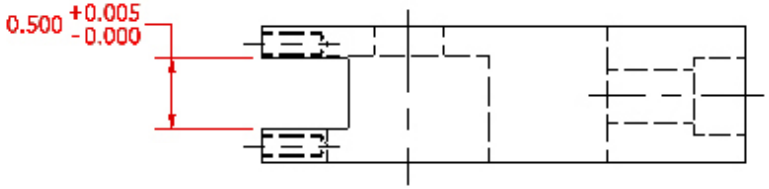

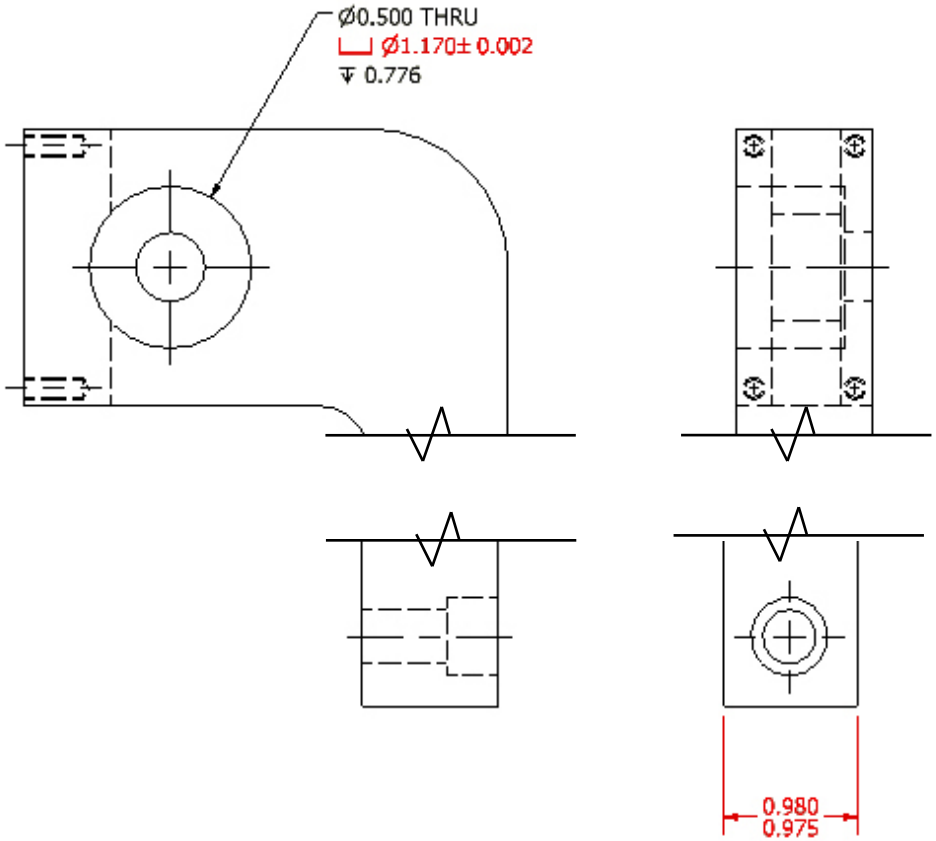

Identify the type of tolerance displayed in red

- Limit dimensions
- Bilateral
- Unilateral

Definitions

- Specified Dimension is the target dimension from which the limits are calculated

Specified dimension
1.50

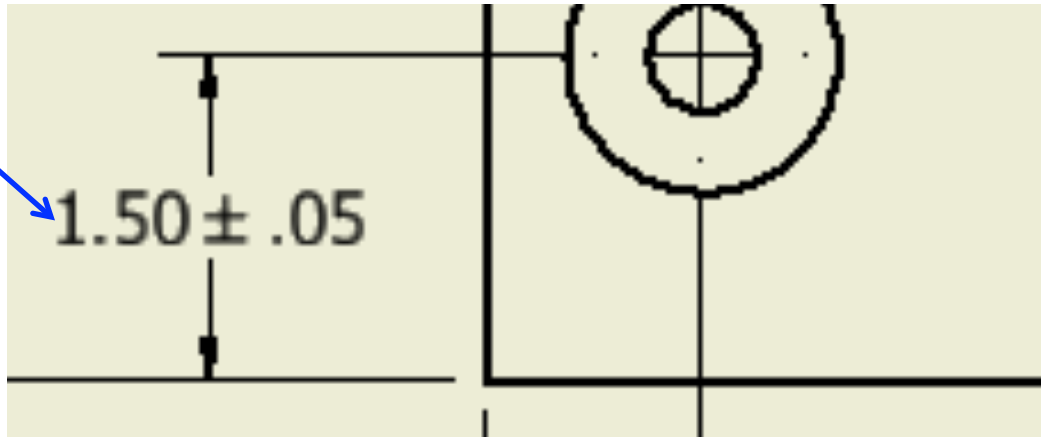

Definitions

- Limits are the maximum and minimum sizes shown by the toleranced dimension
  - Upper limit is the maximum allowable dimension

Upper Limit = Specified Dimension + positive variance
1.55 = 1.50 + 0.05

  - Lower limit is the minimum allowable dimension

Lower Limit = Specified Dimension + negative variance
1.45 = 1.50 + (– 0.05)

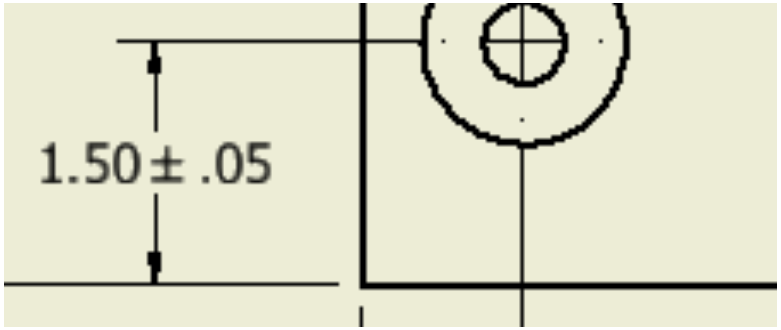

Definitions

- Tolerance is the total variance in a dimension and is equal to the difference between the upper and lower limits.

Tolerance = Upper Limit – Lower Limit
0.10 = 1.55 – 1.45

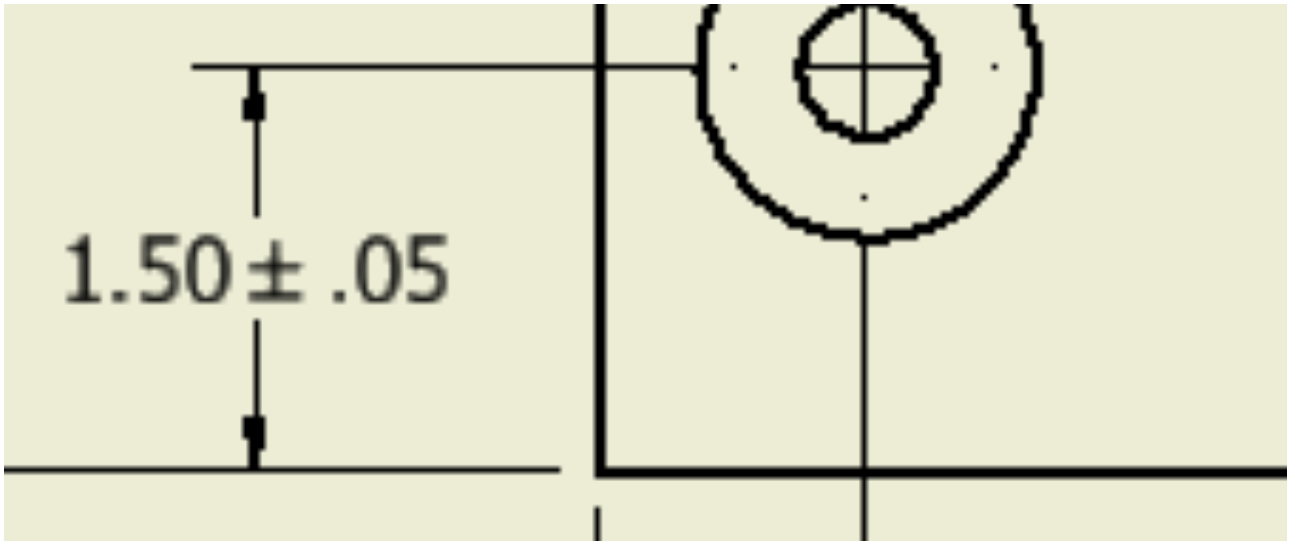

Calculating Tolerance

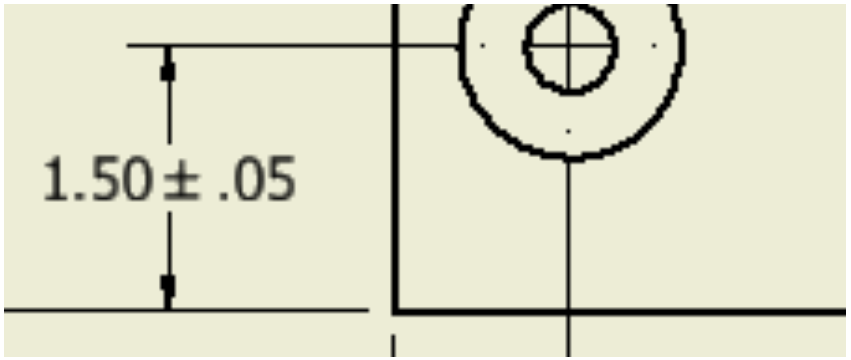

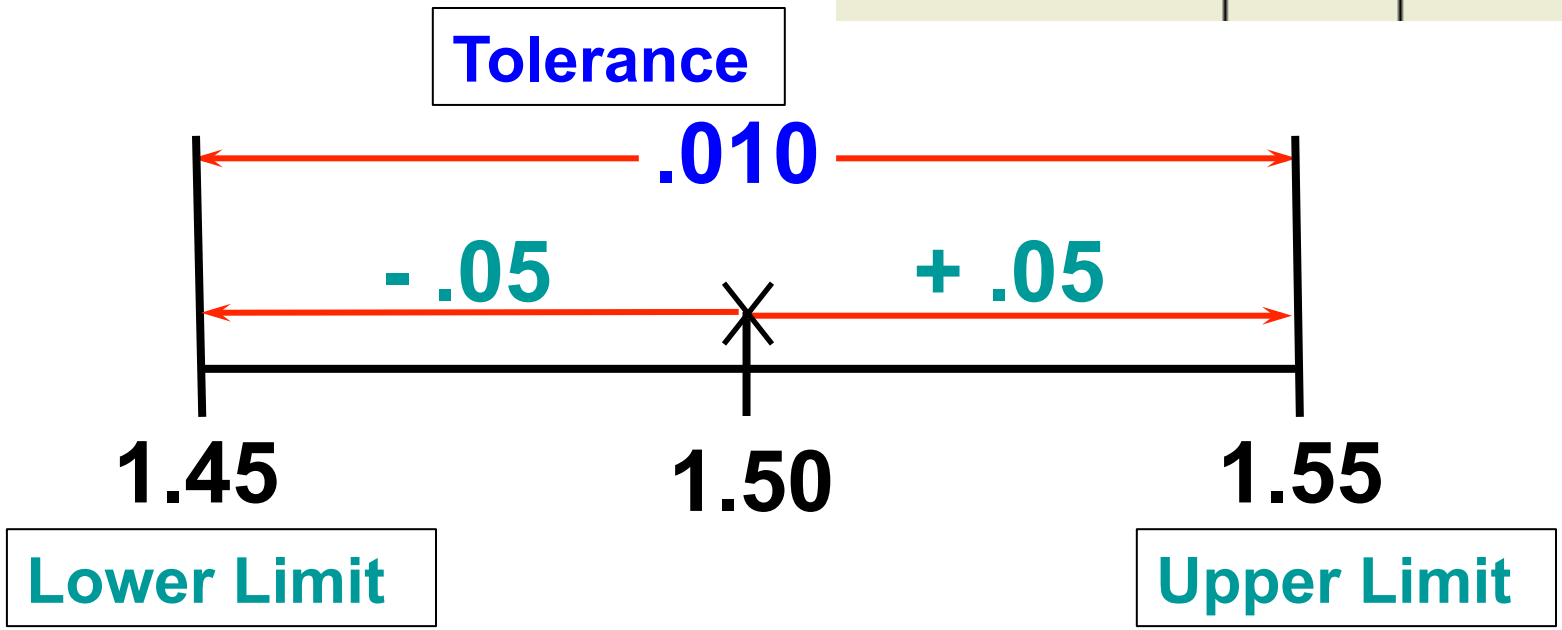

Tolerance = Upper Limit – Lower Limit

0.10 = 1.55 – 1.45

General Tolerances

- General tolerances are tolerances that are assumed if no specific tolerance is given for a dimension
- Typically tolerances are specified based on the number of digits to the right of the decimal point in a dimension
- Shown on drawing

Angles = ± .5°

Linear Dimensions		
X.X	=	± .020
X.XX	=	± .010
X.XXX	=	± .005

General Tolerances

Upper Limit = 3.00 + 0.010 = 3.010

Lower Limit = 3.00 + - 0.010 = 2. 990

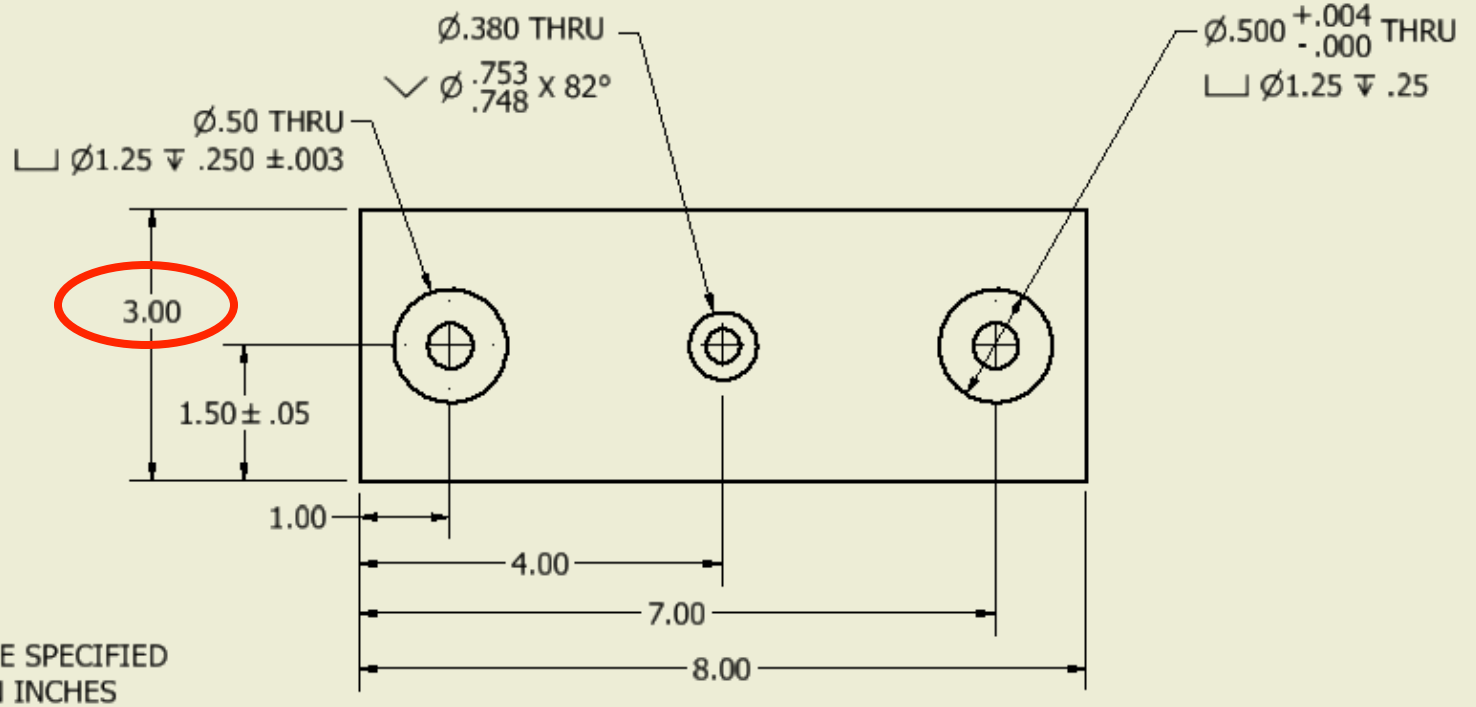

UNLESS OTHERWISE SPECIFIED
DIMENSIONS IN INCHES

DECIMALS:		ANGLES:
X.X	± 0.020	± 0.5°
X.XX	± 0.010	
X.XXX	± 0.005	

Tolerance = Upper Limit – Lower Limit
= 3.010 – 2.990 = 0.020

Out of Tolerance

- A manufactured part is said to be out of tolerance if the part is not within specified limits
- Manufacturing facilities often institute quality control measures to help ensure that parts are within tolerance

Types of Fit

- Clearance Fit limits the size of mating parts so that a clearance always results when mating parts are assembled
- Interference Fit limits the size of mating parts so that an interference always results when mating parts are assembled
- Transition fit occurs when two mating parts can sometimes have a clearance fit and sometimes have an interference fit

Types of Fit

Clearance Fit – Always a clearance between the axle and the opening

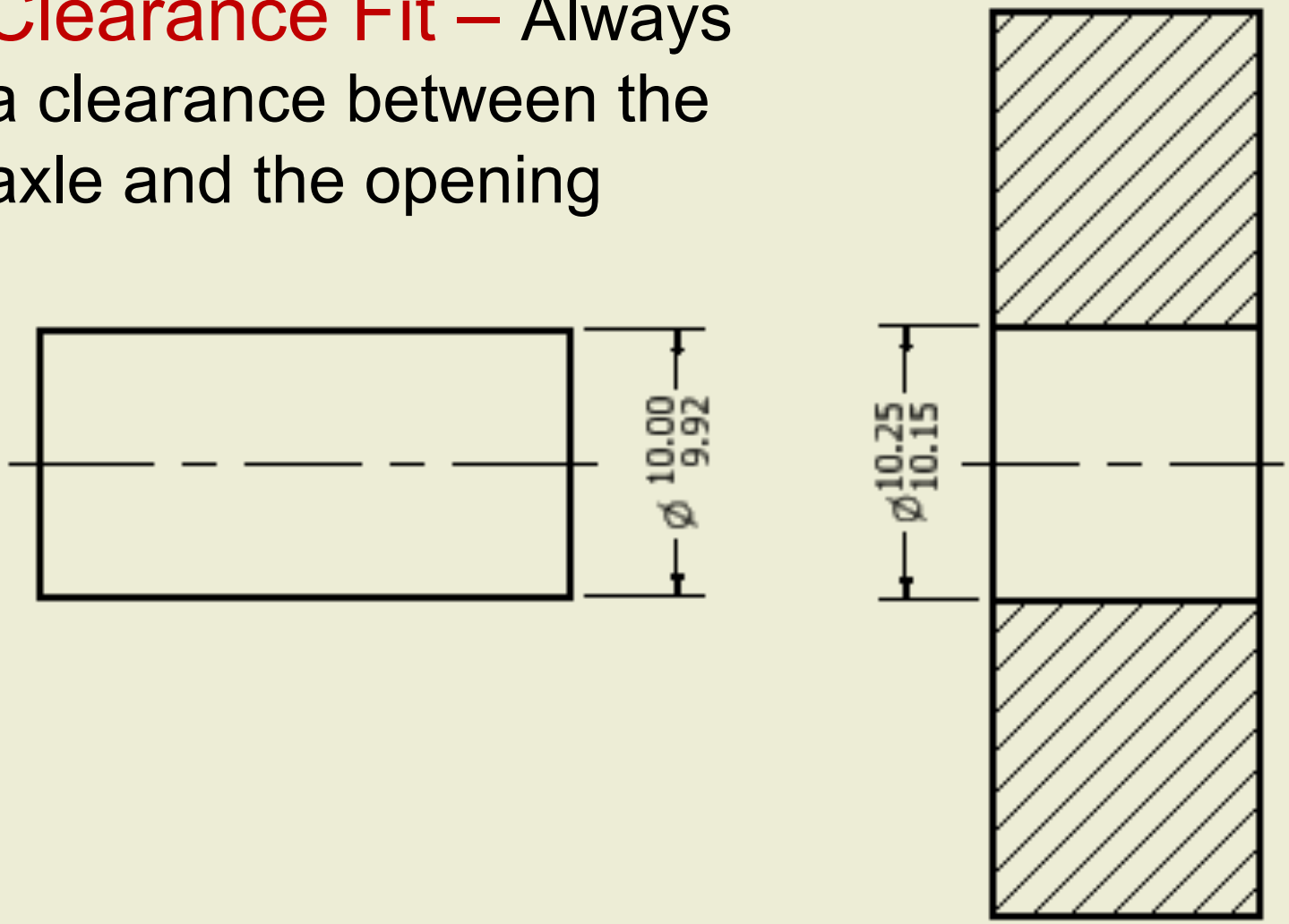

Types of Fit

Interference Fit - Always an interference between the axle and the opening

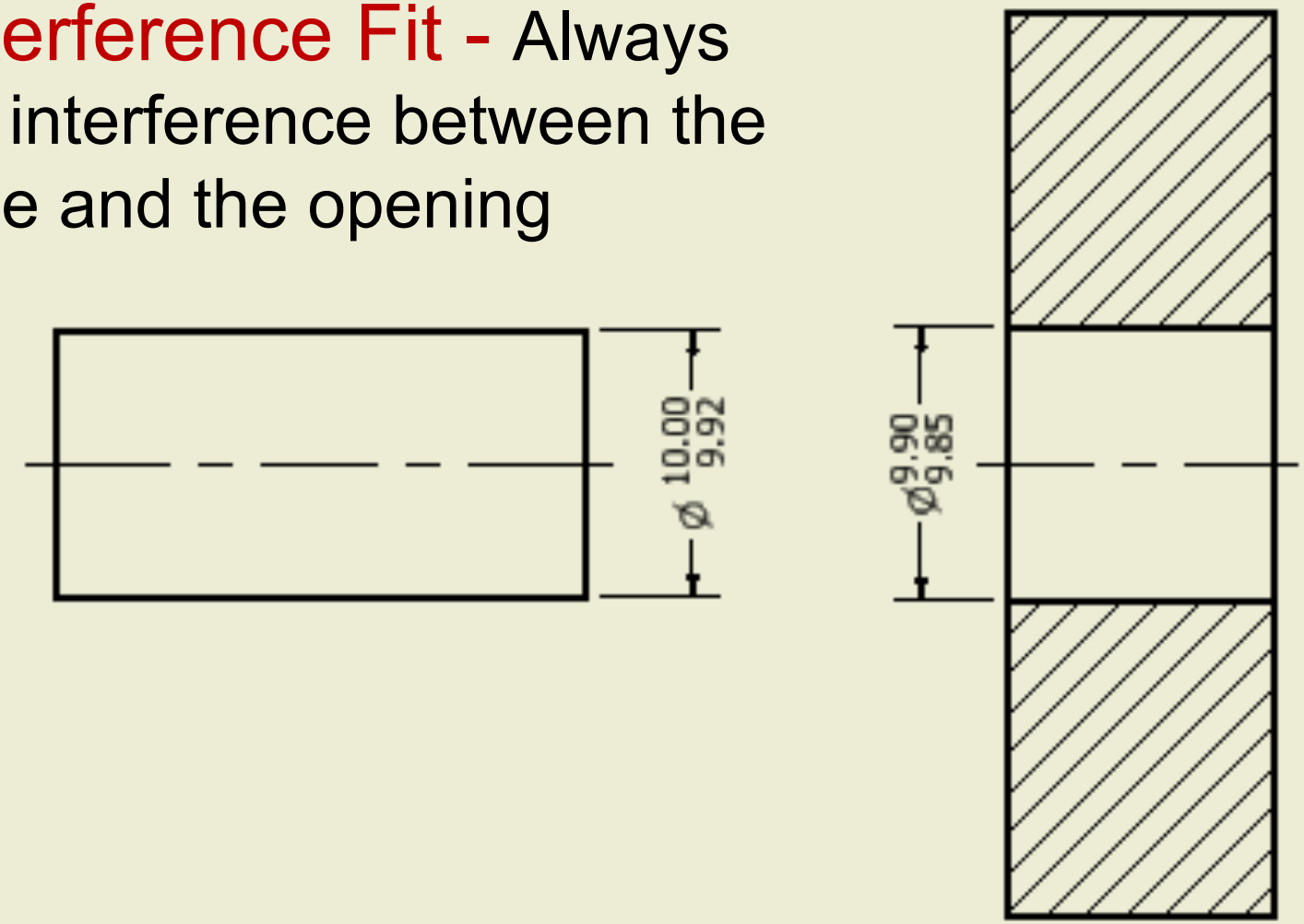

Definitions

- Maximum material condition (MMC) is the condition of a part when it contains the largest amount of material.
  - The MMC of an external feature, e.g., the length of a plate, is the upper limit of the dimension
  - The MMC of an internal feature, e.g., the diameter of a hole, is the lower limit of the dimension

Definitions

- Least material condition (LMC) is the condition of a part when it contains the smallest amount of material.
  - The LMC of an external feature, e.g., the length of a plate, is the lower limit of the dimension
  - The LMC of an internal feature, e.g., the diameter of a hole, is the upper limit of the diameter dimension

Definitions

- Allowance is the minimum clearance or maximum interference between parts

Allowance = MMC internal feature
– MMC external feature

Calculate Allowance

Allowance = MMC internal feature
– MMC external feature

Allowance = 10.15 – 10.00
= 0.15

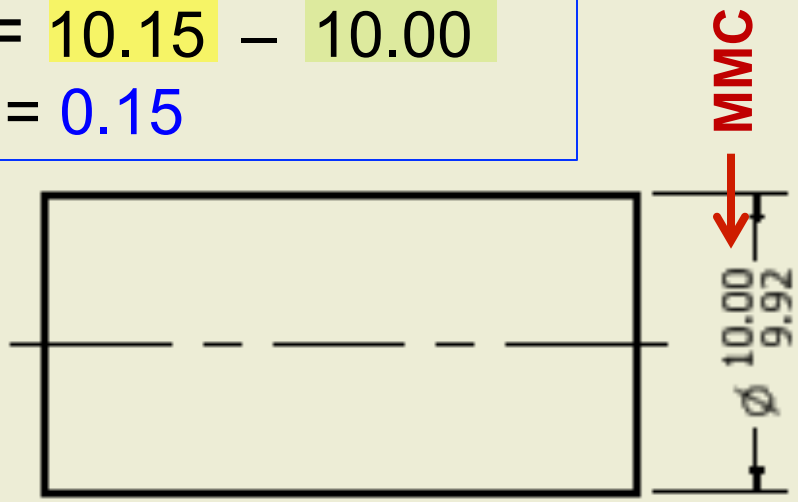

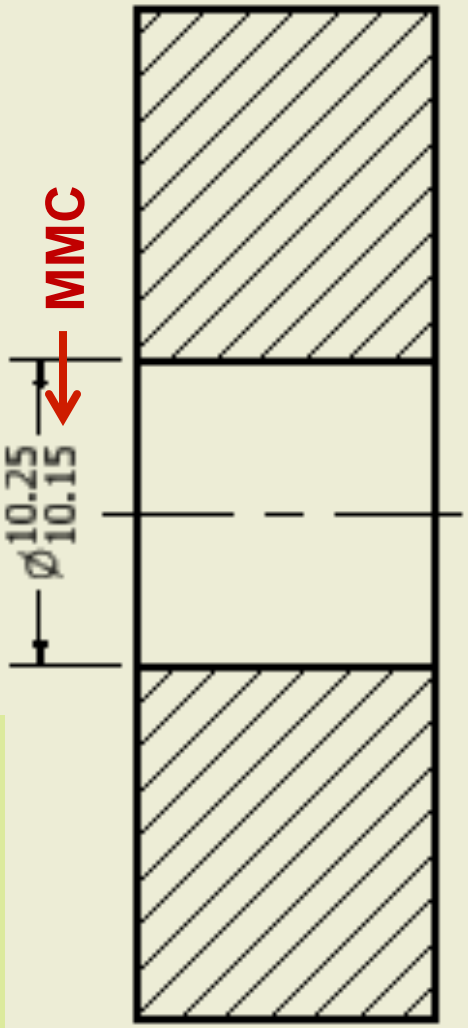

The maximum material condition (MMC) of the hole is 10.15 since the smaller hole will result in the most material in the part

The maximum material condition (MMC) of the axle is 10.00 since the larger axle will result in the most material in the part

Calculate Allowance

Allowance = MMC internal feature
– MMC external feature

Allowance = 9.85 – 10.00
= – 0.15

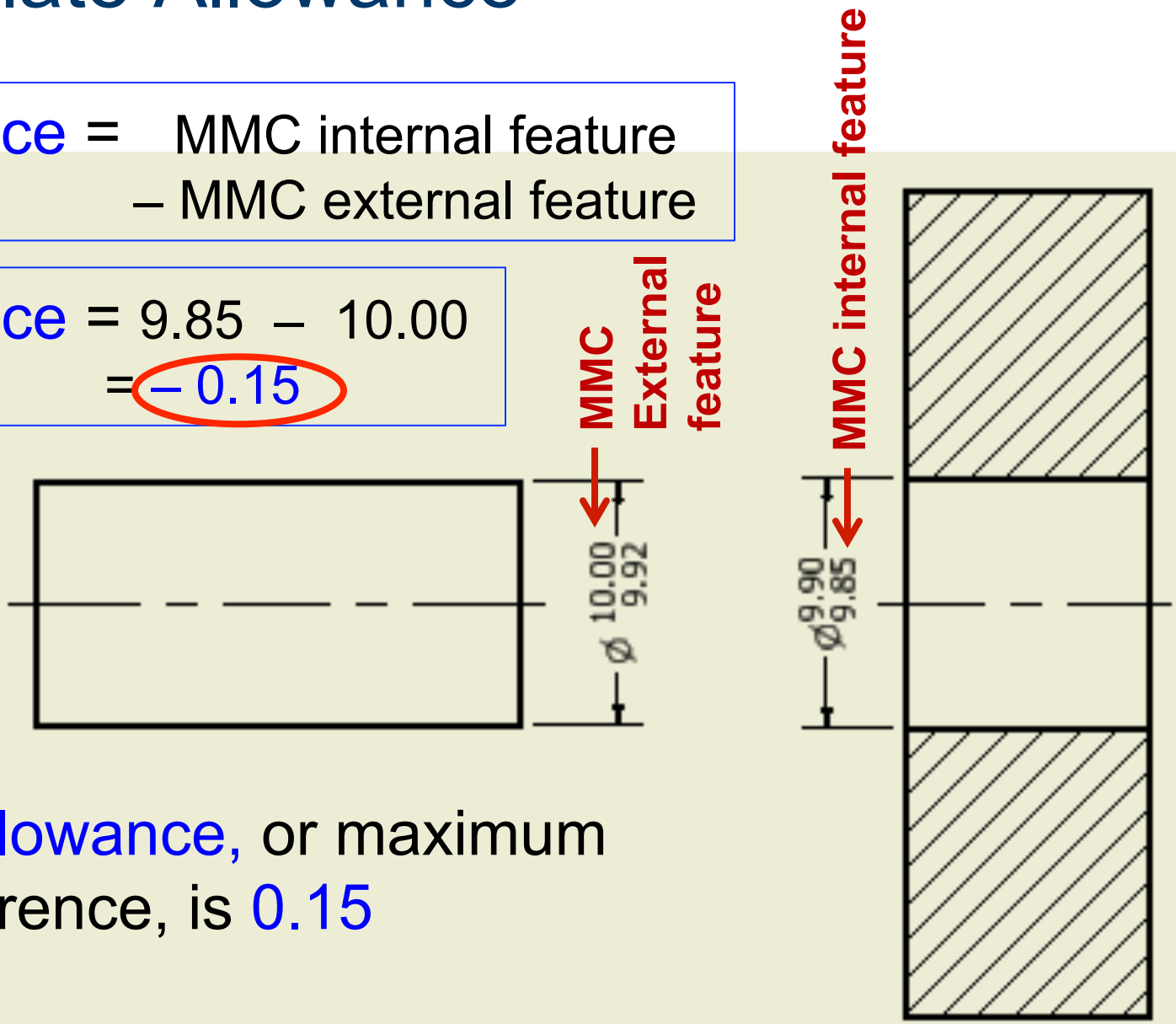

The allowance, or maximum interference, is 0.15

A Note About Dimension Tolerance

- In general, the more significant figures in the dimension, the tighter the tolerance
- Overly precise dimensions and overly tight tolerances increase manufacturing costs
- Specify dimensions only to the precision and tolerance necessary for the part to function properly